Figure 2. from
Chetan Abhijnanam Bora and Badam Singh Kushvah 2026 Planet. Sci. J. 7 doi:10.3847/PSJ/ae589e
https://dx.doi.org/10.3847/PSJ/ae589e
© 2026. The Author(s). Published by the American Astronomical Society.

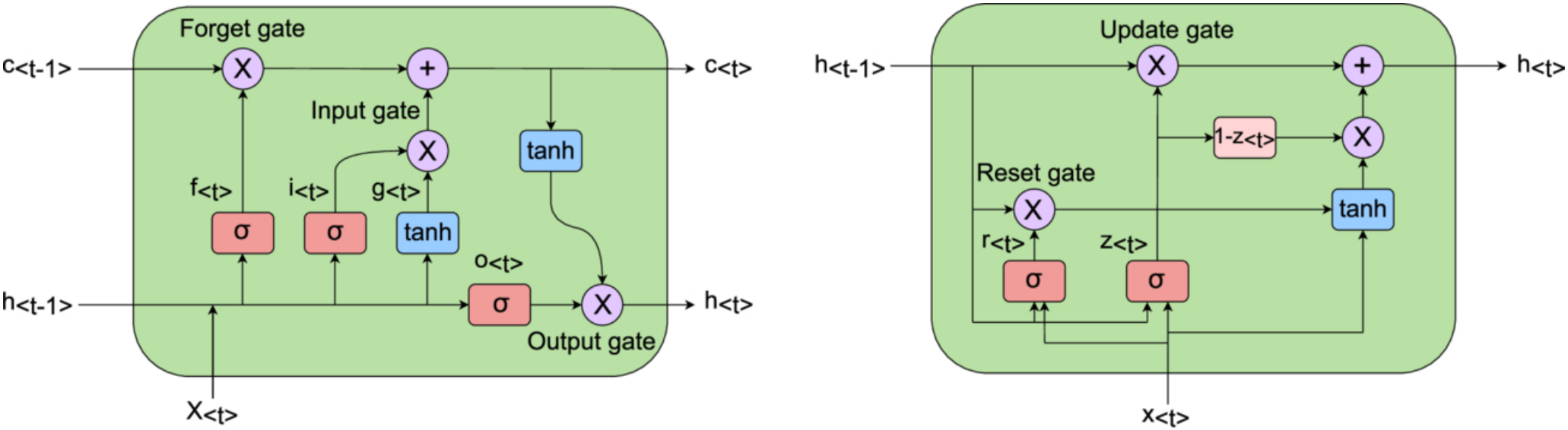

(a) LSTM cell.

(b) GRU cell.