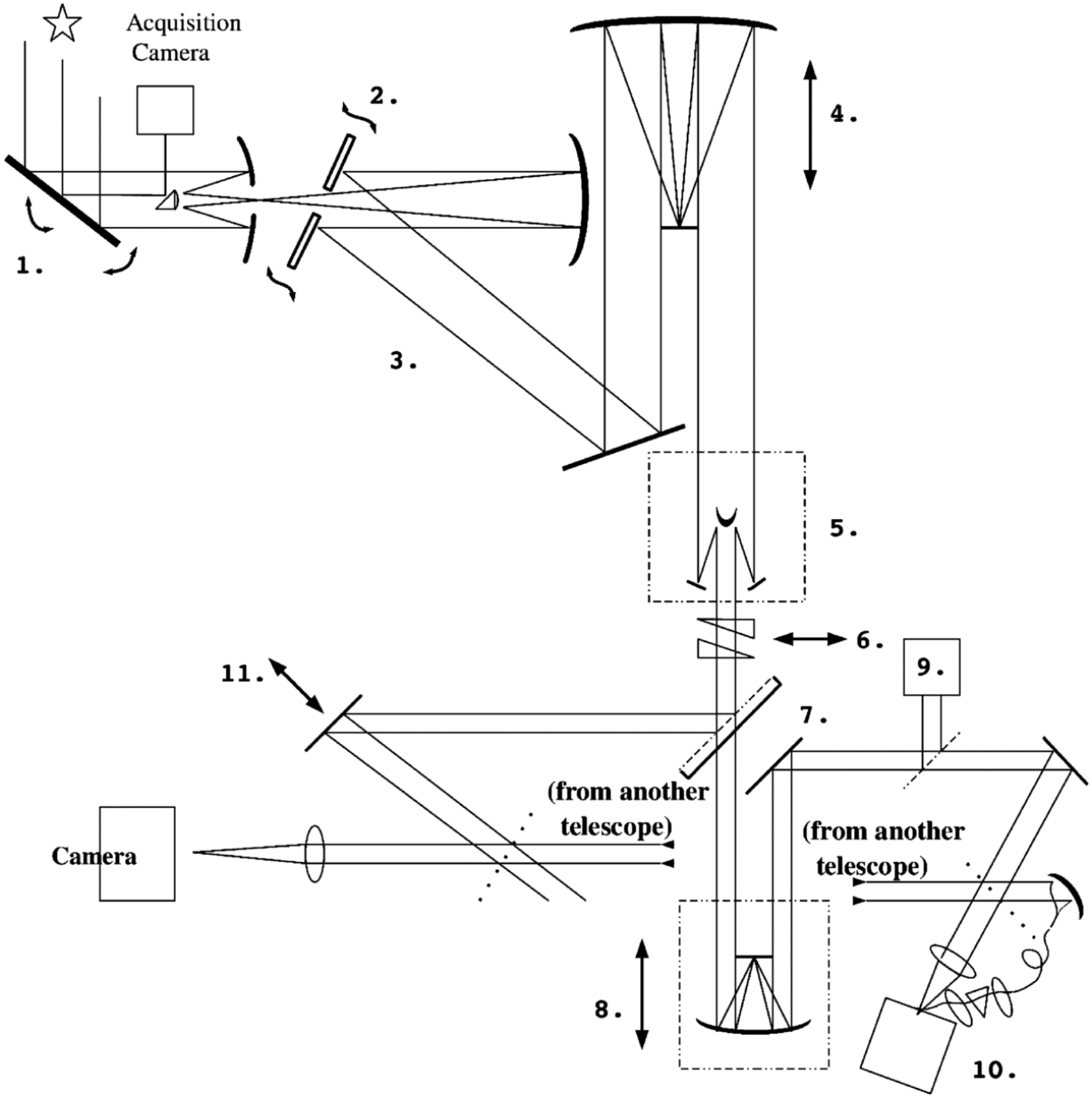Figure 1. from The Phases Differential Astrometry Data Archive. I. Measurements and Description
MUTERSPAUGH ET AL. 2010 AJ 140 1579 doi:10.1088/0004-6256/140/6/1579
https://dx.doi.org/10.1088/0004-6256/140/6/1579
© 2010. The American Astronomical Society. All rights reserved.